Advanced Tachometer

FT-2500

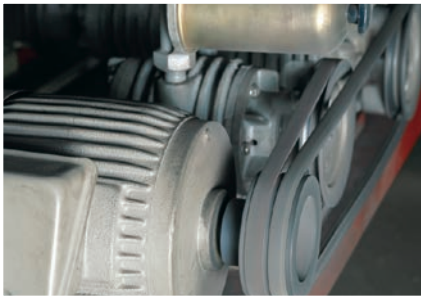

ONO SOKKI

No rotational pulse signal is required for a measurement. The rotational speed is calculated from the frequency signal of light, magnetism, vibration, and sound.

The FT-2500 is an advanced tachometer which measures the rotational speed by the Fast Fourier Transform (FFT) calculation. Moreover, the FT-2500 can measure the rotational speed from frequency signal of sound, vibration or the like even though the rotating shaft is not accessible. The FT-2500 allows versatile rotational speed measurements such as the steady rotation of motor and acceleration/deceleration rotational speed of engine.

Features

- The reflective marks or special machining is not needed to attach the sensor.
- Because the rotational speed measurement can be performed easily from the frequency signal of sound or vibration, no special machining to rotating shaft is required.
- The measurement under the condition of the change or acceleration/deceleration in the rotational speed is available. (When the acceleration/deceleration rotation measurement mode is selected.)
- Provides rotating direction determination function. (When the FT-0501 DC Motor Rotation Detector is used.)
- Easy to read fluorescent display.
- Provides both the analog and pulse outputs.
- Ethernet communication function can be added as an option.

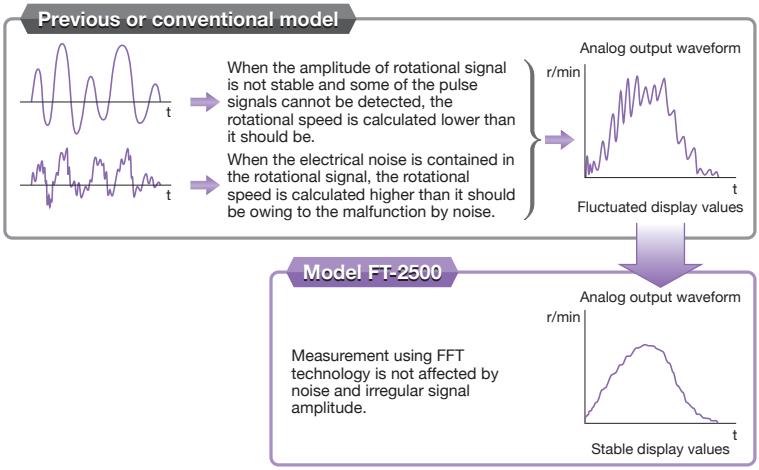

Front

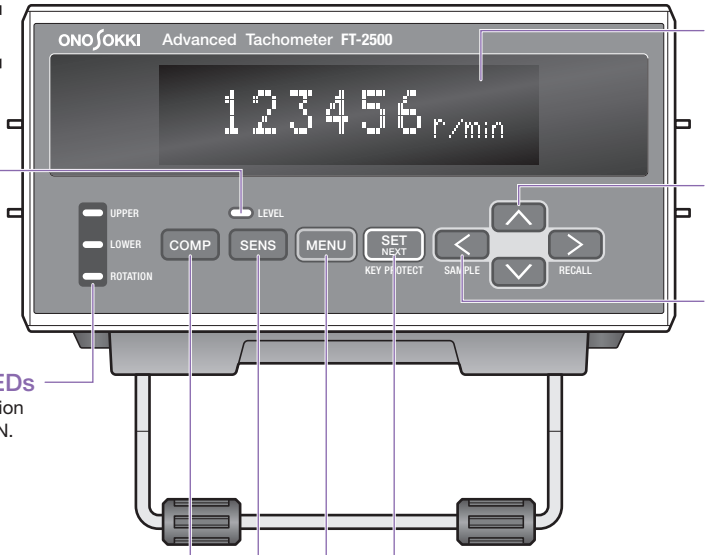

Displaying section

It displays the measurement value. Displaying item can be selected from rotational speed (r/min) or frequency (Hz) in setup mode.

Level monitor LED

This LED is used to monitor the sensor's input signal level.

LED colors	Signal level
Green	Appropriate signal level
Red	Signal level is too high.
Unlit	Signal level is too low.

Comparator status display LEDs

LEDs for displaying comparator operation status of UPPER, LOWER or ROTATION.

LED colors	Comparator status
Green	Comparator OFF
Red	Comparator ON
Unlit	Comparator disabled

< ↑↓→← > key

In setup mode, use this key to change the setup value or selected item.

< ← /SAMPLE> key

In setup mode, the position of the digit for inputting the condition can be moved by pressing this key.
In acceleration/deceleration rotation measurement mode, it is used for measurement start or selection of rotational peak.

< COMP > key

Key for starting/stopping the comparator function. When comparator function of automatic ON is set at 'Normal', the comparator function will be OFF at the time of restarting the main unit. If comparator function of automatic ON is set at 'Auto', the comparator function will be held its state at the time of restarting of main unit.

< SENS > key

Key for fine adjustment of the sensor sensitivity. Pressing this key displays the sensitivity level. Press [↑] or [↓] key to make fine adjustment of the sensitivity.

< MENU > key

Key to select measurement mode or setup mode.

< SET/NEXT > key

In setup mode, you can go to the next setup item by pressing this key. Pressing and holding (for approximately 2 seconds) this key make the key protection function start or stop.

Algorithm

Selectable contents vary depending on the rotational condition. There are 5 kinds of measurement algorithms.

MODE		Measurement algorithm
A	Steady rotation measurement mode	Maximum power spectrum peak detection method
B		Peak-interval mode method
C	Acceleration/deceleration rotation measurement mode	Multi-order peak followup method
D		Maximum power spectrum peak followup method
E		Specific power spectrum peak followup method Rotational speed candidate selection function

- In C,D, and E mode, the FT-2500 follows up the acceleration/deceleration condition owing to the internal high speed processing function.
- In C mode, the FT-2500 predicts the peak value which it should be and calculates the rotational speed even if the maximum peak has been lost.
- In E mode of rotational speed candidate selection, suitable rotational speed can be selected from maximum of 8 frequency peaks.

Calculation is performed using the frequency of the power spectrum's maximum peak. Measurement is usually performed in this mode.

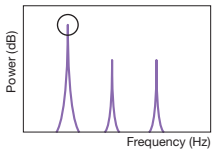

Maximum power spectrum peak detection method

The frequency intervals of the each order component in the rotation are sought sequentially. The most often appeared frequency interval is judged to be the first-order component of the rotational speed in order to fix the rotational speed. This is an effective method when the first-order peak is unstable.

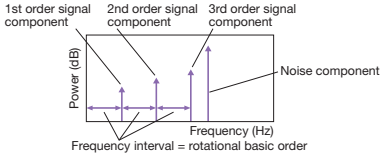

Peak-interval mode method

Protection against the electrical noise

Parts list

Parts name	Manufacturer	Model name
Line filter	Schaffner Holding AG	FN9222R-3-06
Surge killer	Phoenix Contact GmbH & Co.KG (Germany)	F-MS 12ST
Surge killer		VAL-MS 230ST
Surge killer		VAL-MS 230ST
Base for surge killer		VAL-MS-BE

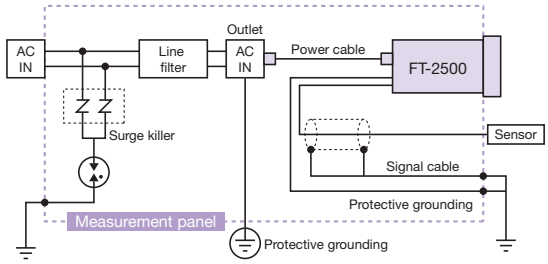

When installing the FT-2500, the following precautions should be taken care of. Some installation conditions may give adverse influence against the noise tolerance.

- Separate the power supply cable of the FT-2500 from the power line which is connected to high-power load.
- Be sure to use the power supply cable which is provided as standard accessory.
- Do not arrange the wiring of the FT-2500 cables in parallel or together with the power line.
- Do not extend the sensor signal cable longer than necessary.
- Use cables of 5m or less in length for DIGITAL-I/O and V-OUT.
- Use a shielded cable as the signal cable. In addition, be sure to ground the shielding wire.
- Keep the FT-2500 as far away as possible from devices, which are generating the strong high-frequency signal or surge.
- Keep the FT-2500 and its cables away from devices, which are generating the strong electric and magnetic fields.
- Be sure to connect the FT-2500 to protective ground.
- When installing the FT-2500 inside a control or measurement panel, ground the instrument shielding wire to the panel and also ground the control or measurement panel.
- If it is subject to influences by electrical strong noise or surge, use a surge killer and noise filter inside the control or measurement panel as shown in the figure left.

* It is requested to wire the signal cable as short as possible. Keep the minus side of the surge killer within 50 cm. Ground both ends of the shielding wires of all input/output signal cables to the ground terminal of the panel.

Rear

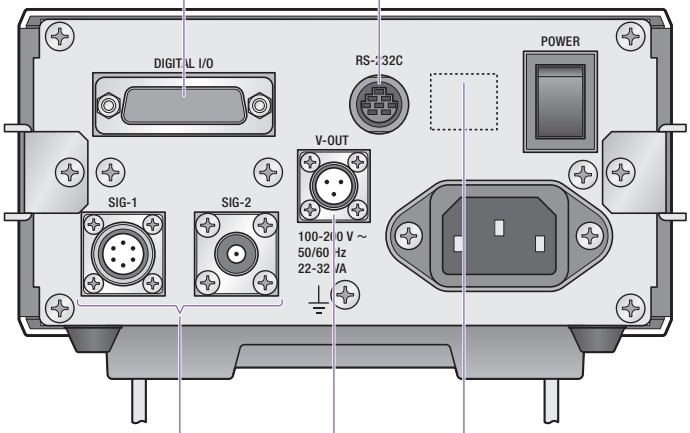

Digital IO

Connector for remote input, comparator output and pulse output

Pin NO.	Functions
1	Comparator UPPER
2	
3	Comparator LOWER
4	
5	Comparator ROTATION
6	
7	Comparator OK
8	
9 to 11	Not connected
12	Pulse output SIG
13	Pulse output COM
14	Remote input SIG
15	Remote input COM

(Note) Pulse output signal (the above No. 12/13) is equivalent to that of the displaying of the frequency.

Remote input

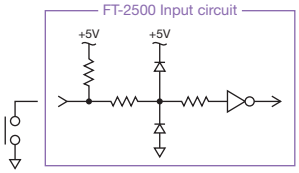

MODE	Remote input terminal	
	Open	Close
NORMAL	Measure	Hold
REVERSE	Hold	Measure

Pulse output

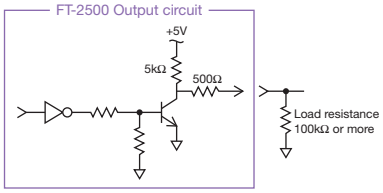

The frequency of measured power spectrum is output after being converted to the pulse signal. Therefore, the displayed value may differ from the frequency of pulse output when the rotational speed is selected as a display.

Comparator output

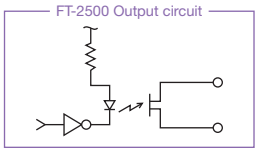

Photo-MOS relay enables the FT-2500 to connect directly to PLC* etc.

RS-232C communication

RS-232C communication can be used with the AX-5022 signal cable.

LAN (Ethernet option) FT-0251

The FT-2500 can be connected to LAN by using Ethernet.

Network I/F	100BASE-TX/10BASE-T (automatic switching)
Protocol	TCP/IP
Connector	RJ-45

(Note) LAN and RS-232C communication cannot be used at the same time.

V-OUT connector

Connector for analog voltage output.
It can output the analog voltage signal for input signal monitoring depending on the setting.

REVO	Voltage output in proportion to the rotational speed
SIG	Signal output for the sensor's signal monitoring

Pin No.	Function
A	SIG
B	COM
C	Not connected

(Note) The signal after envelope-processed and sensitivity adjusted is output from SIG.

Connector for sensor input

Select appropriate input connector from SIG-1 or SIG-2 depending on the sensor.

SIG1 : FT-0501
SIG2 : FT-0801, IP-292, IP-296, IP-3000A, IP-3100, OM-1200, OM-1500, VP-202, VP-1220, NP-3000 series, MI series

*PLC : Programmable Logic Controller

FT-2500 application examples

(Note) The applications described below are provided as examples which we have had experience of the measurement in the past. However, accurate measurement of rotational speed may not be performed depending on the rotational condition or matching between the sensor and the FT-2500. For more information, please contact your nearest distributor.

Rotational speed measurement of a DC motor with the micro rotating shaft

The rotational speed of a DC motor can be measured without attaching the reflective mark on the surface of the shaft. This example allows the rotational speed measurement of the fan, which shaft is too thin that reflective mark can not be attached or optical light can not be reflected straight when optical sensor is used.

- Easy operation - just input the number of fan blades.
- Non-contact measurement - ideal for inspection line measurement.

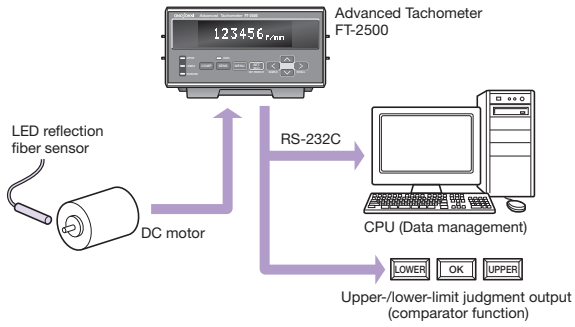

Determining of rotating direction and rotational speed measurement of a general DC motor

It is an example to determine the rotating direction and measure the rotational speed of a DC motor by using the FT-0501 DC Motor Rotation Detector. The FT-0501 detects the magnetic flux leakage of a DC motor and extracts a frequency signal in proportion to the rotational speed. Since the FT-0501 has two internal coils, a phase shift occurs between the two detected signals. The rotating direction is then determined by the relationship of these two phases. This function is very convenient for quality control of small DC motors, whose rotating directions may be difficult to be determined visually. Of course, it can measure the rotational speed.

- Rotating direction is also determined by the output of the two-phase signal.
- The output function (semiconductor relay) that determines the rotating direction is useful for CW/CCW judgment on inspection lines.

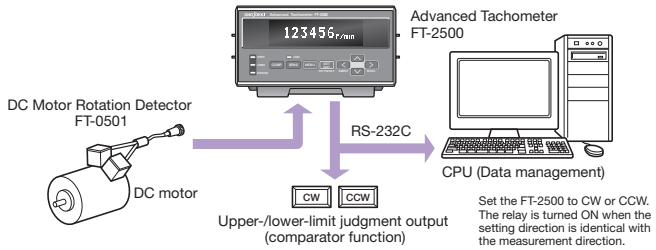

Rotational speed measurement of a compressor using an accelerometer

With a combination of the FT-2500 and suitable accelerometer, the rotational speed of a compressor in the refrigerator, vending machine, air conditioner etc, which shaft is not directly accessible, can be measured easily.
Put an accelerometer (NP-3000 series) on an optional magnet base (NP-0100 or NP-0101) and check the signal at various locations. And then place it at an optimum position on the compressor.

- Permits easy measurement of compressor shaft's rotational speed even though a rotating shaft is not accessible.
- Permits measurement of the rotational speed of a compressor itself and also which is already built in a final product.

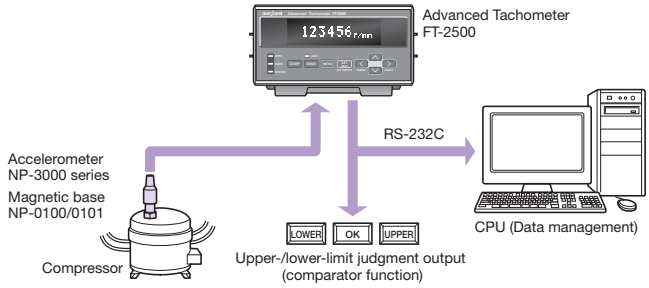

Rotational speed measurement of a DC motor in a fuel pump using a current probe sensor

Many DC motors are mounted in automobile electrical equipment. The consumption current of the DC motor pulses in proportion to the number of poles in the motor. The rotational speed of the DC motor can be accurately measured by inputting the current signal which is detected by the current probe sensor to the FT-2500.
This example is ideal for measuring the rotational speed of a stand-alone DC motor or products (parts) that incorporate motors whose lead wires are accessible, such as those found in automobile electrical equipment.

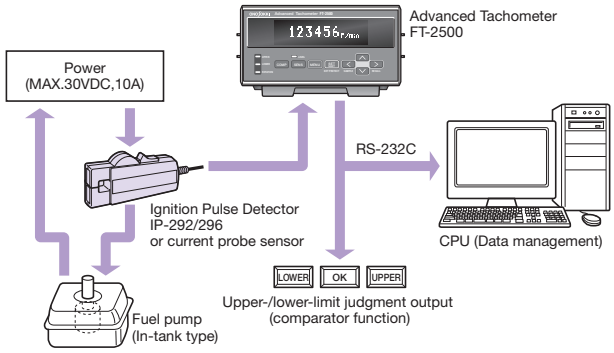

Rotational speed measurement of a pump using sound pressure

A pump's rotational speed is easily measured by monitoring exhaust sound. The rotating shaft in a pump is generally not exposed externally, making it difficult to perform measurement of the rotational speed by the ordinary and conventional pulse detection method. In this example, the sound pressure of the exhaust sound is detected for the rotational speed measurement with a microphone.

- Easy operation - just input the number of blades.
- Permits measurement of pump rotations when the rotating shaft is not directly accessible.

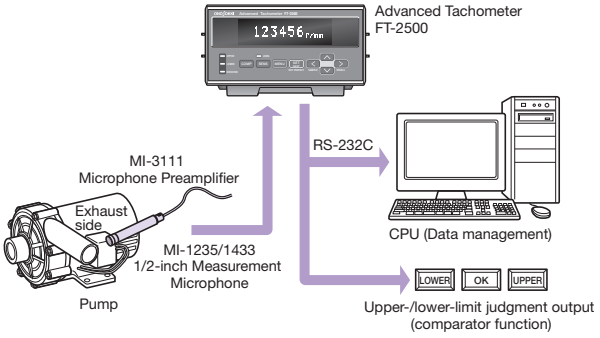

Rotational speed measurement of a DC motor which is built in a home appliance

A popular electric toothbrush is operated by converting the rotation of the DC motor into the vibration. The FT-2500 with FT-0501 detector can measure the rotational speed by detecting the magnetic flux leaking from the DC motor which is built in such product.

- The FT-2500 detects the pulsation of the magnetic flux leakage in proportional to the number of poles of the DC motor which is built in the finished product.
- Provides two steps, upper-/lower-limit comparator output which is ideal for OK, LOWER, or UPPER determination on inspection lines.
- Permits data management through RS-232C interface.
- Measurement system can be configured at affordable cost.

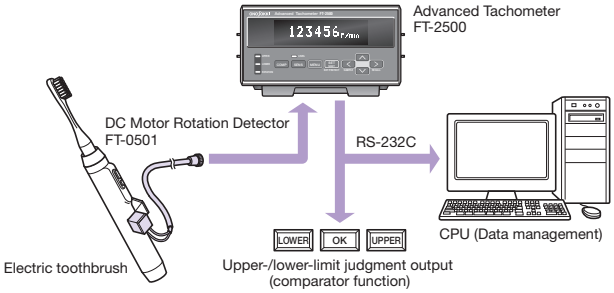

Rotational speed measurement of an engine using a microphone or an accelerometer

The FT-2500 can measure the rotational speed of an engine by the sound and vibration related to the movement of the pistons. It is effective when the rotational sensor cannot be attached because the engine compartment is covered.

- Set the number of pulses to match the number of ignition firings per one crankshaft rotation.
  (e.g.) Set at 2 P/R in the case of a four-cylinder engine with four-cycle

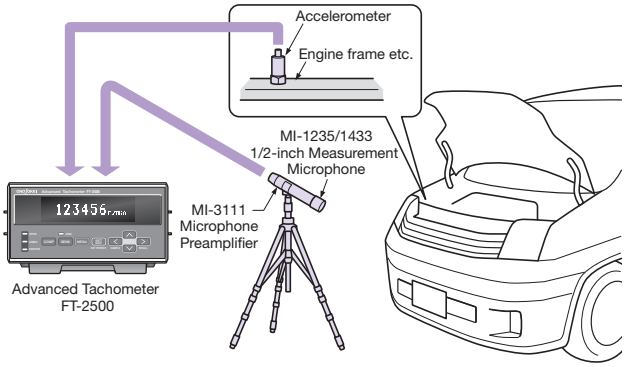

Rotational speed measurement of an engine using an engine rotational sensor

The rotational speed of an engine can be measured by clamping a sensor to the primary low-voltage or secondary high-voltage conductor. Measurement can be performed simply by inputting the number of ignitions per rotation.

- Set the number of pulses to match the number of ignition firings per one rotation.
  (e.g.) In the case of a four-cycle engine
  If you perform the measurement on the primary side, set the number of pulses at half number of cylinders.
  If you perform the measurement on the secondary side, set at 0.5P/R because one pulse is generated per two rotations.

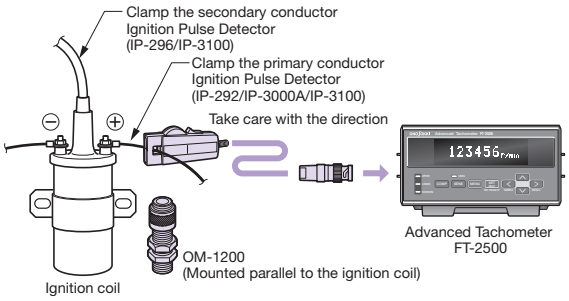

Rotational speed measurement of an engine using a cigarette lighter socket sensor

Connect the sensor to a power outlet in a car or construction machine. With the FT-2500, you can determine rotational speed of the engine by measuring the ignition noise from the power outlet. Can be used with both 12 and 24 VDC batteries.

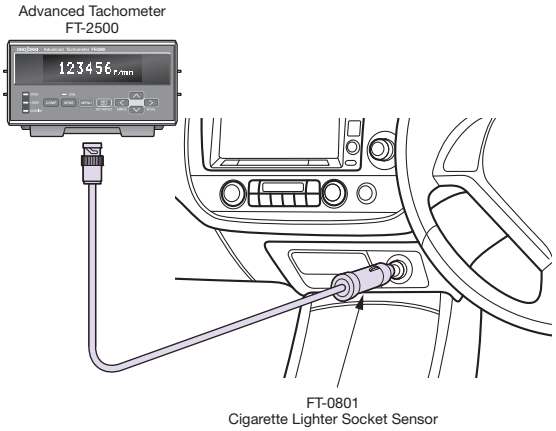

Rotational speed measurement of an engine from muffler's sound using a microphone

This example shows how to measure the rotational speed of an engine from muffler's sound. Since the pulsation component of the engine rotation is included in the muffler's sound, the engine's rotational speed can be obtained by the frequency component of this pulsation.

- Set the number of pulses to match the number of ignition firings per one crankshaft rotation. Please note, however, that depending on muffler performance, there may be cases that measurement cannot be performed.
- Muffler's sound level and engine rotational speed can be measured simultaneously using the FT-2500 in combination with the LA-3000 series Sound Level Meter. By using a comparator function of the FT-2500 and an external control function of the LA-3000 series, you can measure the sound level after getting the specified rotational speed.

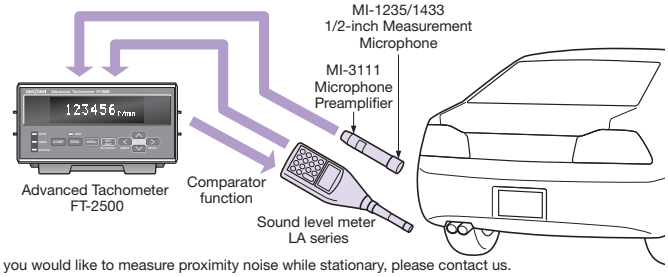

* If you would like to measure proximity noise while stationary, please contact us.

Rotational speed measurement of a motor

By detecting magnetic flux change, you can perform the rotational speed measurement of a motor in a hybrid/electric car or the motor in its air conditioner. Using the OM-1200, which detects magnetic flux leakage from an object, you can measure the rotational speed of the motor even if the rotating shaft is not directly accessible.

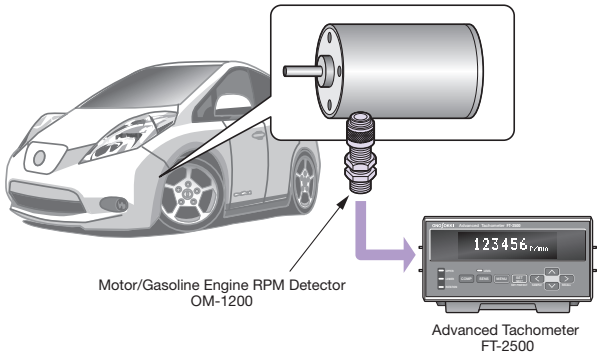

Rotational speed measurement of a dryer and an electric drilling machine using an accelerometer

By the rotational vibration, the FT-2500 can measure the rotational speed of a motor which is built into the dryer, electric drilling machine or the similar equipment even though the motor is not accessible.

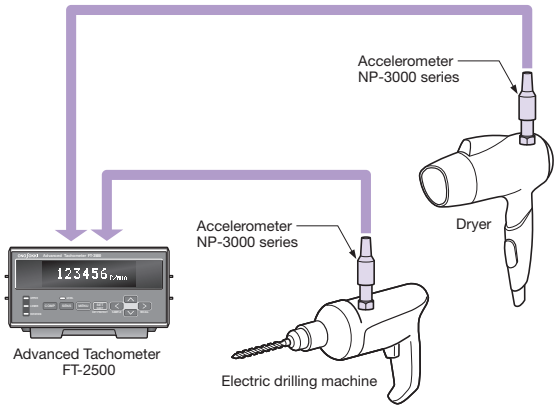

System configurations

The model with * has been already discontinued.

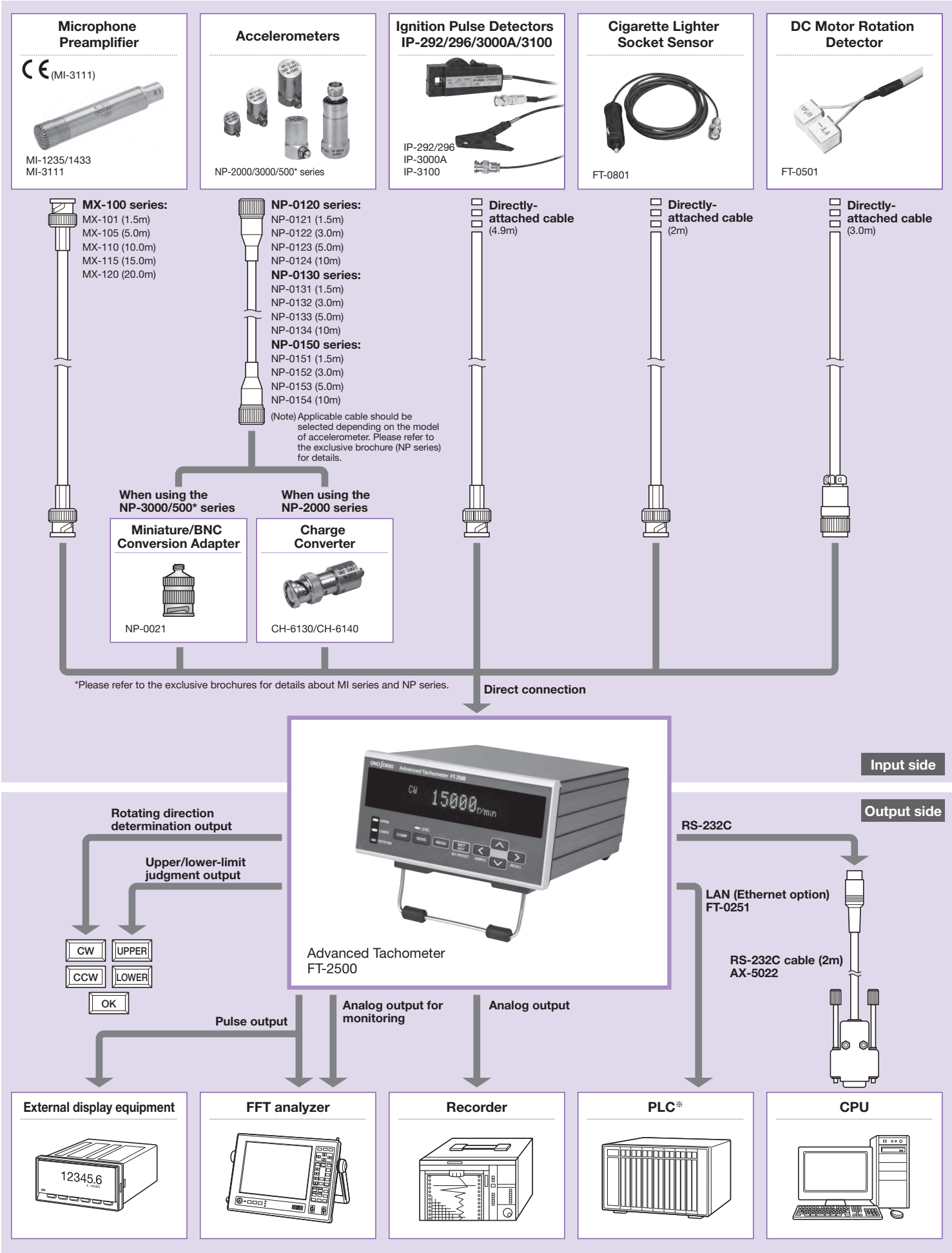

※ PLC : Programmable Logic Controller

Specifications

Signal input section

• SIG 1 (FT-0501)

Input voltage range	±12V, ±0.5V
Input coupling	AC
Input connector	R03-RB6F (main unit side)
Power supply for sensor	12±0.6VDC (150mA MAX)

• SIG 2 (FT-0801, IP-292, IP-296, IP-3000A, IP-3100, OM-1200, OM-1500, VP-202, VP-1220, NP-3000 series, MI series)

Input voltage range	±5V, ±0.5V, ±0.05V
Input coupling	AC
Input connector	BNC304 (BNC) (main unit side, female)
Power supply for constant current line drive	2.2 to 3.2mA (25°C)

*Power supply for constant current line drive is output only when MI or NP series is connected with the FT-2500.

Measurement section

• Measurement mode: Steady rotation measurement mode

Arithmetic calculation	1024-point FFT calculated processing
Frequency range	500Hz, 2kHz, 10kHz
Rotational speed searching range	Measurement frequency range (Hz) x 60/(pulse count [P/R]) Measurement frequency range • 500Hz range selected: 3.75Hz to 500Hz • 2kHz range selected: 15Hz to 2kHz • 10kHz range selected: 75Hz to 10kHz
Update time	500ms or less
Measurement accuracy	±2 x rotational speed resolution [r/min] ±1 count *The accuracy of rotational speed depends on the frequency range.
Rotational speed resolution	Frequency range [Hz] ÷ 12800 x 60 ÷ set pulse count [P/R] *12800=400 Lines x 32

• Measurement mode: Acceleration/deceleration rotation measurement mode

Arithmetic calculation	512/256-point FFT calculated processing
Frequency range	250Hz, 500Hz, 2kHz
Rotational speed measurement range	Measurement frequency range (Hz)x60/(pulse count [P/R]) Measurement frequency range • 250Hz range selected: 3.75Hz to 250Hz • 500Hz range selected: 7.5Hz to 500Hz • 2kHz range selected: 30Hz to 2kHz
Update time	250ms or less
Measurement accuracy	±2 x rotational speed resolution [r/min] ±1 count *The accuracy of rotational speed depends on the frequency range.
Rotational speed resolution	Frequency range [Hz] ÷ 6400 x 60 ÷ set pulse count [P/R] * The resolution is low when the rotational speed is changing. * 6400=200 Lines x 32

Display section

• Main displaying device

Displaying device	Fluorescent display tube (blue-green)
Display update time	0.5±0.2s
Display resolution	1r/min, 1Hz
Measurement display range	0 to 999,999 r/min (0 to 10,000Hz)

• Level monitor LED

Displaying device	2-color LED
LED status	Unlit: Sensor signal amplitude is small and steady measurement is disabled. Lit in green: Sensor signal amplitude is appropriate. Lit in red: Sensor signal amplitude exceeds the set voltage range.

• Comparator monitor LED (common to UPPER, LOWER, and ROTATION)

Displaying device	2-color LED
LED status	Unlit: Comparator function is stopped. Lit in green: Comparator function is active and measurement values meet setting conditions. Lit in red: Comparator function is active and measurement values do not meet setting conditions.

Rotational pulse count setting

Setting range	0.5 to 199.5
Minimum number of steps	0.5 [P/R]

Averaging processing

Averaging type	Moving average
Allowable count	OFF, 2,4,8,16 (times)

Filter function

Processing type	Specifying the desired measurement rotational speed range (frequency) within the selected frequency range.
Setting	Specifying upper-/lower-limit rotational speeds (frequency)

Rotating direction determination

Applicable sensor	FT-0501
Determination	CW/CCW
Determination output	Semiconductor relay, status display

Key protection function

Setting/releasing	Key protection function is enabled or disabled by pressing and holding SET/NEXT key for approximately 2 seconds in measurement mode.
Keys to be protected	All keys except <(SAMPLE) key when returning to measurement ready state at the acceleration/deceleration rotation measurement mode.

Analog voltage output

• REVO output

Output content	Output in proportion to the displayed value
Voltage range	0 to 10V/0 to F.S.
Conversion type	D/A conversion
Linearity	±0.3% of F.S.
Output update time	Steady rotation measurement mode (CONSTANT): 500ms or less Acceleration/deceleration rotation measurement mode (ACTIVE): 250ms or less
Temperature stability	±0.05% of F.S./ °C (common to ZERO and SPAN)
Setting error	±0.5% of F.S. (default error at the time of factory shipment, common to ZERO and SPAN)
Load resistance	100kΩ or more
Output connector	R03-RB3F
Calibration function	Outputting ZERO/FULL calibration signal

• SIG output

Output content	The external sensor signal which was reshaped to a waveform (analog output for monitoring purpose)
Load resistance	100kΩ or more
Output connector	Switching to/from REVO output connector

Comparator output

Items	LOWER, UPPER, ROTATION, and OK
LOWER operation	ON when LOWER threshold value > displayed value
UPPER operation	ON when UPPER threshold value ≦ displayed value
ROTATION operation	ON when comparator ROTATION operation direction setting = measurement value (CW/CCW)
OK operation	ON when three comparators above are all OFF.
Output type	Semiconductor relay (Photo-MOS)
Output connector	D-SUB (15-pin connector)
Maximum contact capacity	30VDC, 0.1A
Contact ON resistance	50Ω or less

Pulse output

Signal content	Pulse of power spectral frequency extracted by FFT calculation
Output voltage	LO:1V or less , HI:4.5V or more (when no loaded)
Load resistance	100kΩ or more
Output connector	D-SUB (15-pin connector)

External command signal

Measurement start signal	Terminal open: measurement starts. Terminal close: measurement stops.
Input logic switching	Enabled by RS-232C communication in setup mode.
Input connector	D-SUB (15-pin connector)
Input signal type	Non-voltage contact input Open voltage:5V±0.25V, Short-circuit current:1mA or less, Contact resistance:50Ω or less

Condition memory function

Function content	Saving parameter setting values to non-volatile memory
Number of conditions	3 kinds (selectable in setup mode)
Content of memory	Setting parameters

Communication function

• RS-232C

I/F function	Reading measurement data, setting parameters, reading parameters
Connector	HR12-10R-8SDL
Baud rate	2400, 4800, 9600, 19200bps

• Ethernet (option)

Network I/F	100BASE-TX/10BASE-T (automatic switching)
Protocol	TCP/IP
Connector	RJ-45

General specifications

Power requirement	100 to 240VAC, 50/60Hz
Power consumption	22 to 32VA
Operating temperature range	0 to +40℃
Storage temperature range	-10 to +55℃
Outer dimensions	144(W) x 72(H) x 180(D)mm (Not including protruded sections)
Weight	Approx. 1.2kg
Conformity standard	CE marking EN61010-1: 2001 (2nd) EN61326-1: 2006 CE : This mark represents a declaration that the product is conforming to EC directives.

Accessories

Power cable	(Rated voltage 100V to 240VAC) 1 pc.
Instruction manual	1 copy
Panel mounting fixture	1 set
Stand foot	1 set
Connector	D-SUB (15-pin plug)

Applicable sensors / options (sold separately)

Cigarette Lighter Socket Sensor FT-0801	Ignition Pulse Detector (Primary Side) IP-292	Ignition Pulse Detector (Secondary Side) IP-296
Ignition Pulse Detector IP-3000A	Ignition Pulse Detector IP-3100	Motor/Gasoline Engine RPM Detector OM-1200
Motor/Gasoline Engine RPM Detector OM-1500	DC Motor Rotation Detector FT-0501	Engine Vibration Detector VP-202/1220 (High-sensitivity Type)
Piezoelectric Type Accelerometer NP-2000/3000 series	1/2-inch Measurement Microphone MI-1235/1433 Microphone Preamplifier MI-3111	High Function Sound Level Meter LA-3000 series

Main unit

- FT-2500 Advanced Tachometer

Detectors

- FT-0801 Cigarette Lighter Socket Sensor
- IP-292 Ignition Pulse Detector (Primary Side)
- IP-296 Ignition Pulse Detector (Secondary Side)
- IP-3000A Ignition Pulse Detector
- IP-3100 Ignition Pulse Detector
- OM-1200 Motor/Gasoline Engine RPM Detector
- OM-1500 Motor/Gasoline Engine RPM Detector
- FT-0501 DC Motor Rotation Detector
- VP-202 Engine Vibration Detector
- VP-1220 Engine Vibration Detector (High-sensitivity Type)
- NP-2000/3000 series Piezoelectric Type Accelerometer
- MI-1235/1433 1/2-inch Measurement Microphone
- MI-3111 Microphone Preamplifier
- LA-3000 series High Function Sound Level Meter
- FT-0100 Analog Output Cable 1.5 m R03PB3M - BNC245
- FT-0110 Pulse Output Cable 1.5 m D-Sub 15-pin - BNC245
- AX-5022 RS-232C Cable 2 m
- FT-0251 Ethernet Communication Function (A LAN cable is not included.)

Outer dimensions

(Unit: mm)

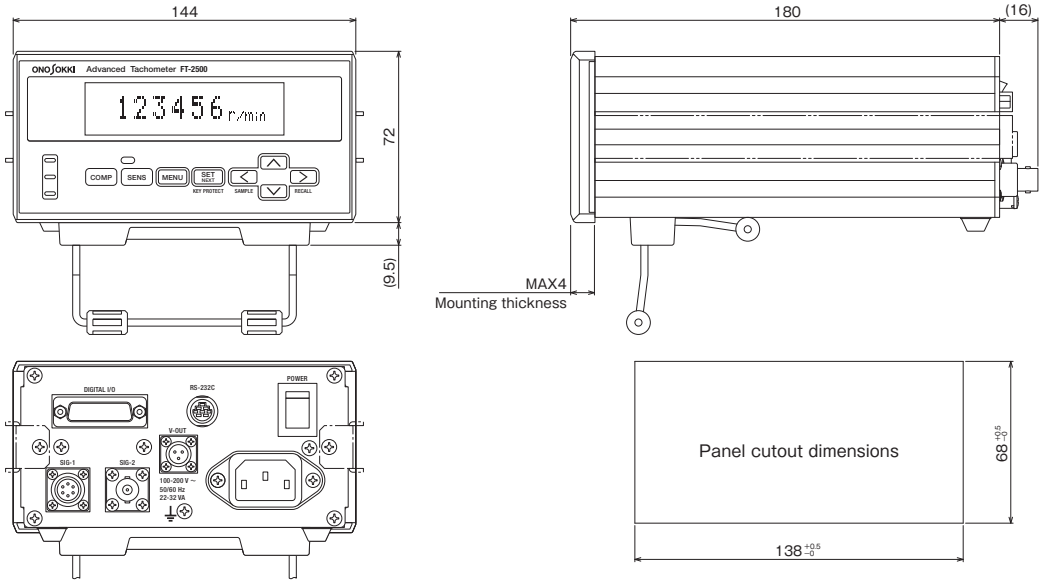

* All company names and product names are trademarks or registered trademarks of each individual company.
The copyrights are reserved by each individual company.

ONO SOKKI

WORLDWIDE ONO SOKKI CO., LTD.
3-9-3 Shin-Yokohama, Kohoku-ku, Yokohama 222-8507, Japan
Phone : +81-45-476-9725 Fax : +81-45-476-9726
E-mail : overseas@onosokki.co.jp

* Outer appearance and specifications are subject to change without prior notice.

URL: http://www.onosokki.co.jp/English/english.htm

U.S.A.
Ono Sokki Technology Inc.
2171 Executive Drive, Suite 400,
Addison, IL. 60101, U.S.A.
Phone : +1-630-627-9700
Fax : +1-630-627-0004
E-mail : info@onosokki.net
http://www.onosokki.net

THAILAND
Ono Sokki (Thailand) Co., Ltd.
1/293-4 Moo.9 T.Bangphud
A.Pakkred,
Nonthaburi 11120, Thailand
Phone : +66-2-584-6735
Fax : +66-2-584-6740
E-mail : sales@onosokki.co.th

INDIA
Ono Sokki India Private Ltd.
Plot No.20, Ground Floor, Sector-3,
IMT Manesar Gurgaon-122050,
Haryana, INDIA
Phone : +91-124-421-1807
Fax : +91-124-421-1809
E-mail : osid@onosokki.co.in

P.R.CHINA
Ono Sokki Shanghai Technology Co., Ltd.
Room 506, No.47 Zhengyi Road, Yangpu
District, Shanghai, 200433, P.R.C.
Phone : +86-21-6503-2656
Fax : +86-21-6506-0327
E-mail : admin@shonosokki.com

CAT. NO. 195-03E 20X (SUN)